RITCHIE Specs

Search over 15900 equipment specs

Home

Venieri VF9.23 Loader Backhoe

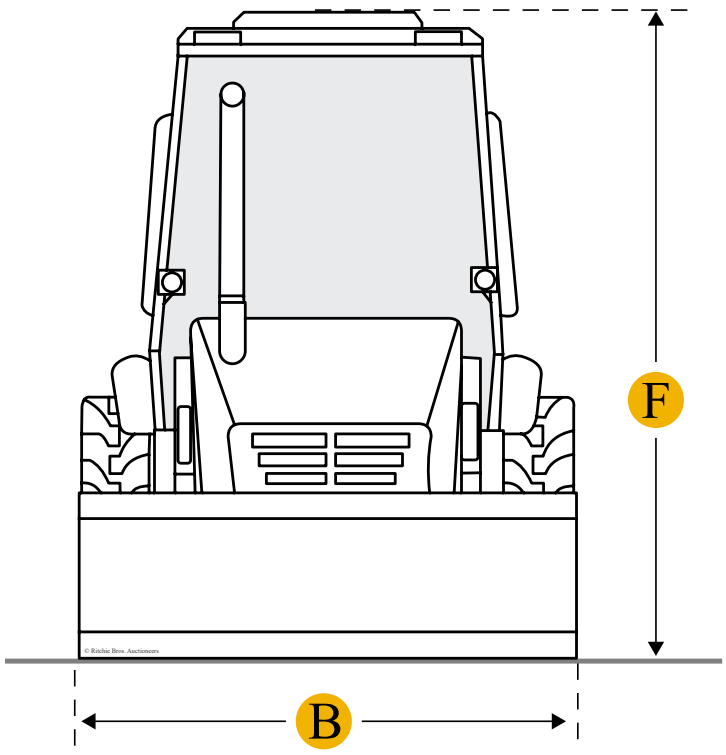

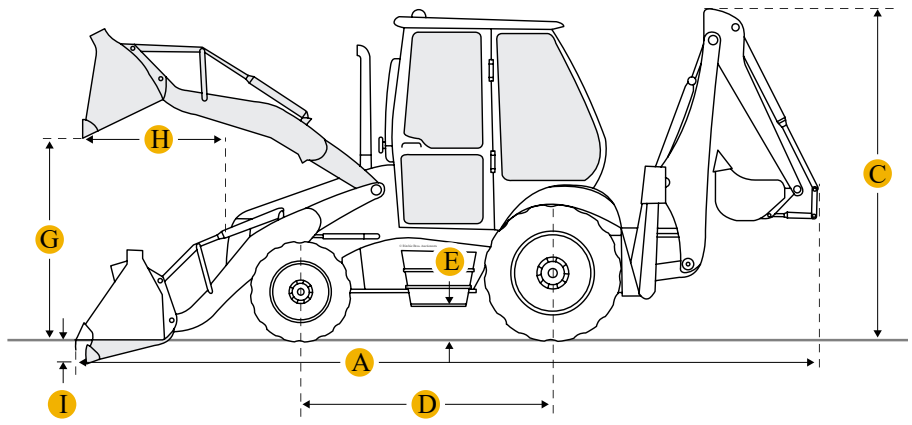

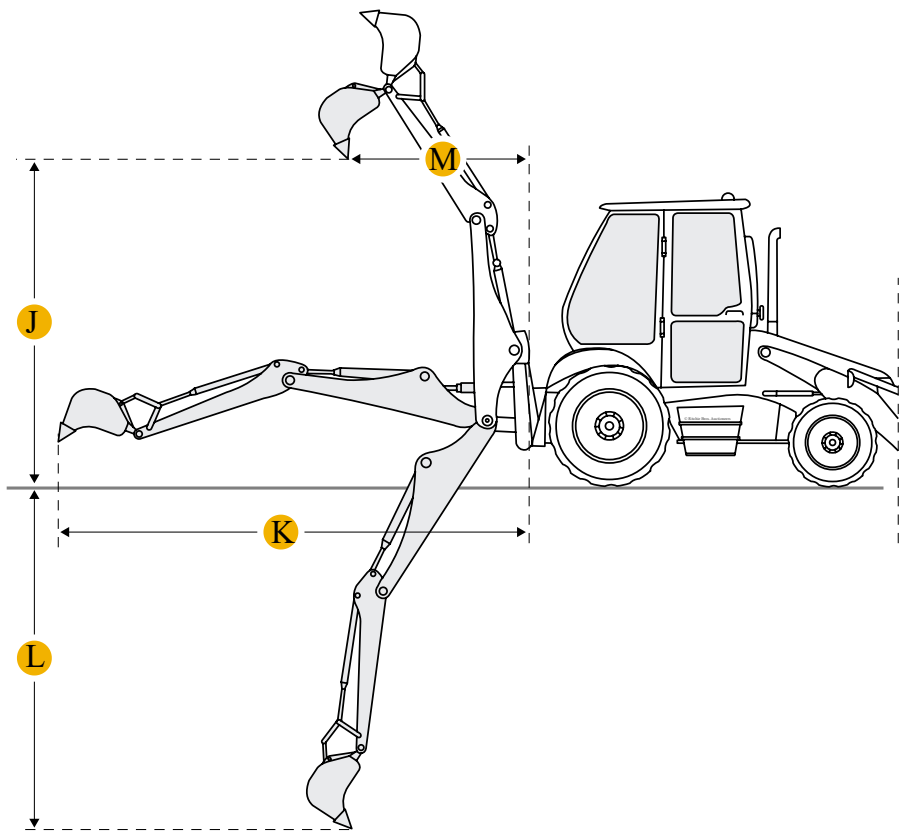

Units Imperial Metric

Dimensions

Backhoe

J	**Load Height - Std**	17.07 ft in
K	**Reach From Swivel - Std**	18.21 ft in
L	**Dig Depth - Std**	17.72 ft in

Dimensions

A	**Transport Length**	19.03 ft in
B	**Transport Width**	7.39 ft in

C	**Transport Height**	11.59 ft in

Loader

G	**Clearance At Max Dump Height**	11.16 ft in
	Bucket Width	88.59 in
	Bucket Capacity	1.57 yd3

Specifications

Engine

Number Of Cylinders	4
Engine Make	2351
Engine Model	1004-40T
Gross Power	112.7 hp
Power Measured @	2200 rpm
Displacement	244.1 cu in

Operational

Operating Weight 4wd	18739.3 lb
Turning Radius	14.8 ft in

Transmission

Transmission Type	Hydrostatic
Number Of Forward Gears	3
Number Of Reverse Gears	2
Max Speed - Forward	20.6 mph

Hydraulic

Pump Type	Piston
Pump Flow Capacity	38.4 gal/min
Relief Valve Pressure	3335.9 psi

Compare similar models

[MST M544]

Dig Depth - Std 17.8 ft in

[JCB 3CX 17FT (217)]

Dig Depth - Std 17.6 ft in

[Caterpillar 446B]

Dig Depth - Std 17.2 ft in

Compare

Find Venieri VF9.23 Loader Backhoe for Sale

See Venieri Loader Backhoe for sale rbauction.com
See Venieri Loader Backhoe for sale ironplanet.com
See Venieri Loader Backhoe for sale mascus.com

`

Need help? Contact Us

English

Company +

Popular Searches +

Looking for equipment or trucks?

Ritchie Bros. sells more new and used industrial equipment and trucks than any other company in the world.

Equipment for sale on rbauction.com

Equipment for sale on ironplanet.com

Equipment for sale on mascus.com

Sell your equipment

© 2007-2018 RitchieSpecs Equipment Specifications Ritchie Bros. Auctioneers © Privacy Statement| Terms of Use
OEM specifications are provided for base units. Actual equipment may vary with options.